1. Taping dimensions (Unit: mm)

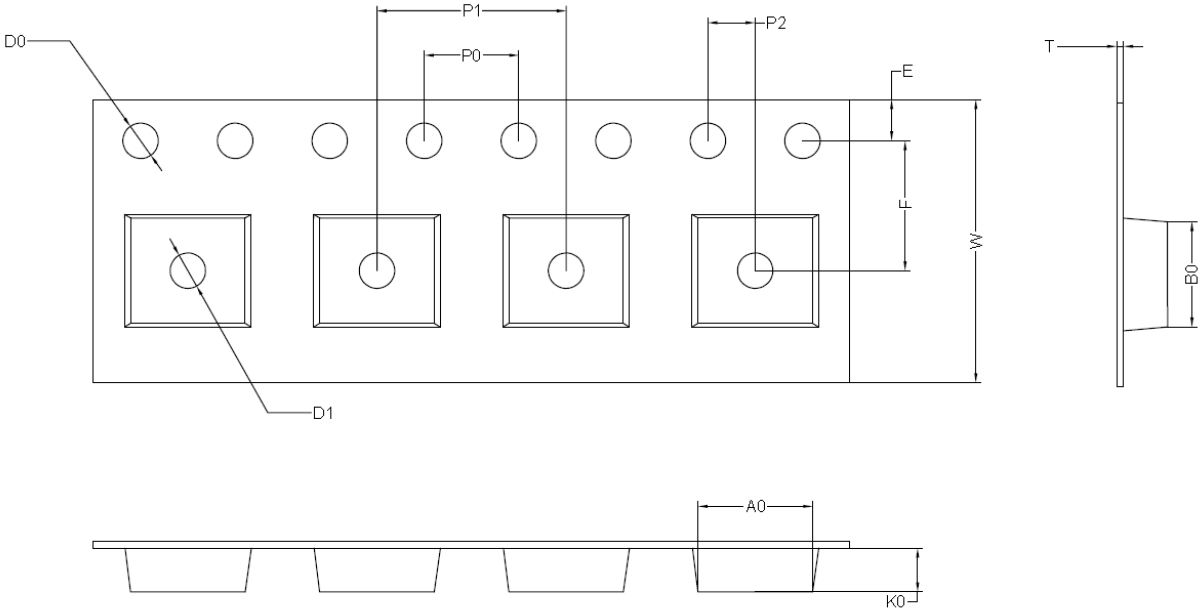

SYMBOL	A0	B0	K0	P0	P1	P2
SPEC	4.85±0.10	4.45±0.10	1.85±0.10	4.00±0.10	8.00±0.10	2.00±0.05
SYMBOL	T	E	F	D0	D1	W
SPEC	0.25±0.03	1.75±0.10	5.50±0.10	$1.50^{+0.25}_{-0.00}$	1.50±0.10	$12.00^{+0.30}_{-0.10}$

TAPING POSITION (SOT-89)

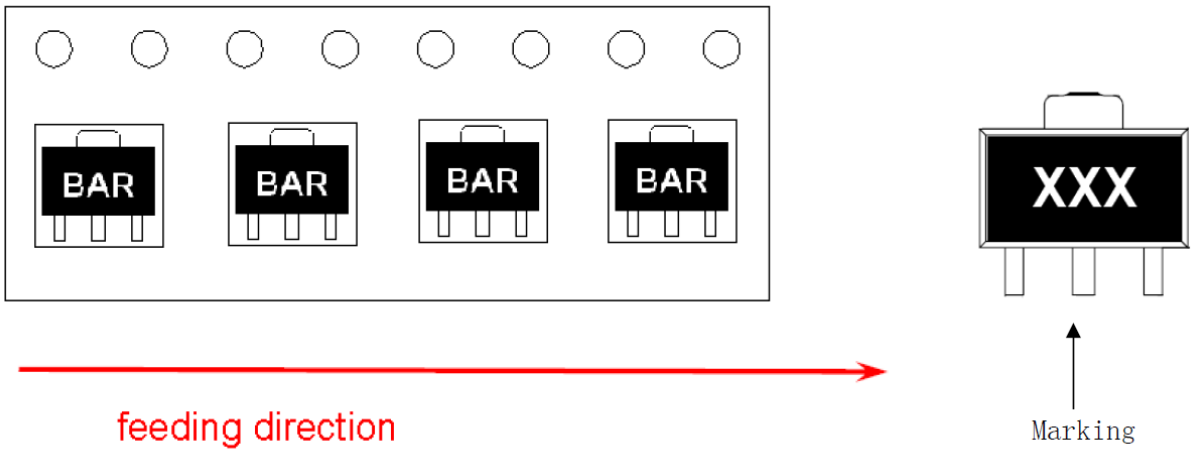

2. Reeling specification

2-1. Leading direction

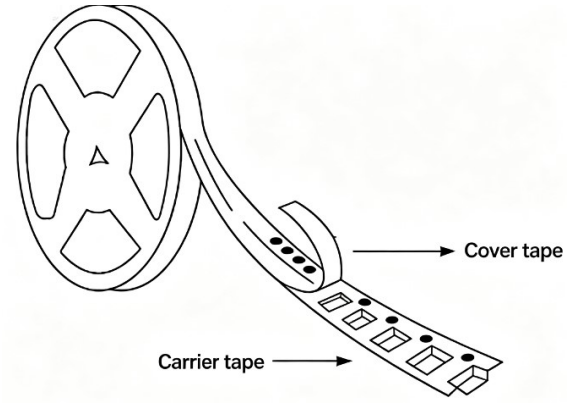

2-2. Leader and Trail

Leader tape shall be separated into two parts-an adhesive tape at first part and carrier tape without products.

Trail tape shall remain with no product and trail tape shall not be stuck directly on a reel.

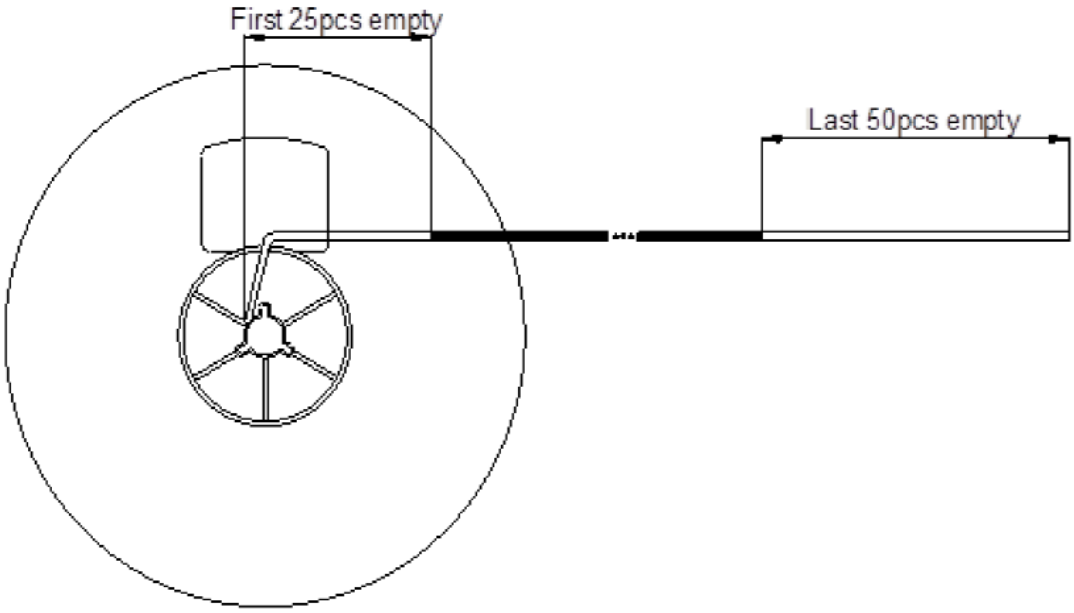

3. Treatment for end of tape

The end of leader tape shall be fixed with the yellow adhesive tape.

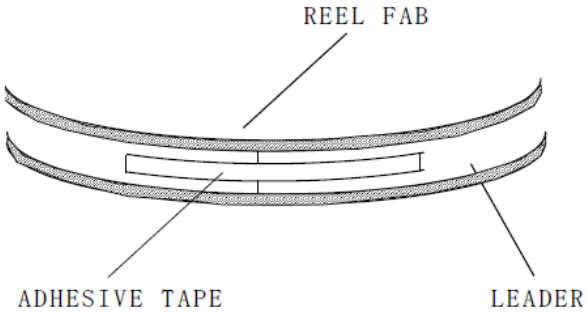

4. Quantity 1,000 pcs / reel
5. Reel dimensions (Unit: mm)

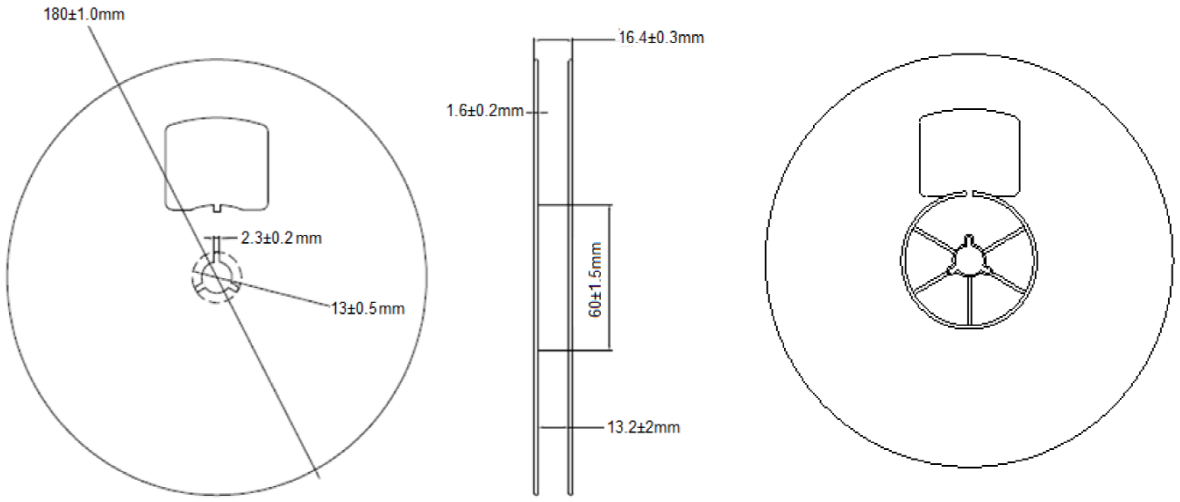

6. Marking
Each reel shall be legibly marked with the following items.

7. Type
Product code of taping shall be composed as indicated below.

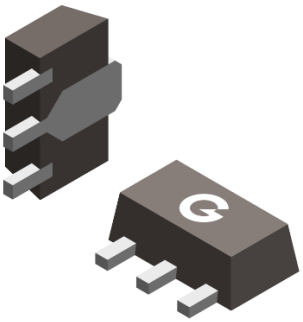

8. Taping Peeling Strength

Peel Force（Reel Package）

Angel of peeling off: 180±15 degree

Speed of peeling off: 3m per minute

Peel Force: 20g~80g

9. Recommended storage condition

Storage period

Use the products within 24 months after delivered.

Storage conditions

Products should be stored in the warehouse on the following conditions.

Temperature : 0~ 35° C

Humidity: 30 to 70% relative humidity No rapid change on temperature and humidity

Don't keep products in corrosive gases such as sulfur, chlorine gas or acid, or it may cause oxidization ofelectrode, resulting in poor solderability.

10. Package

1.ONE REEL(1Kpcs)

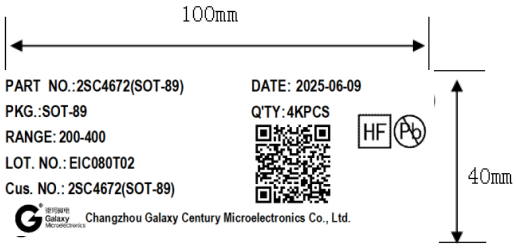

THE REEL LABEL

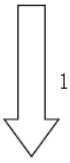

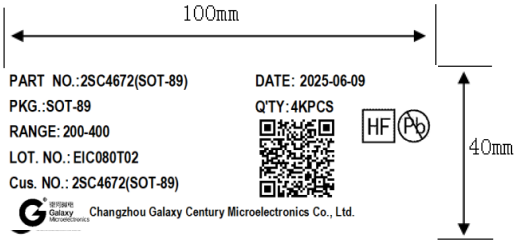

THE INNER BOX OR CARTON LABEL

2. INNER BOX

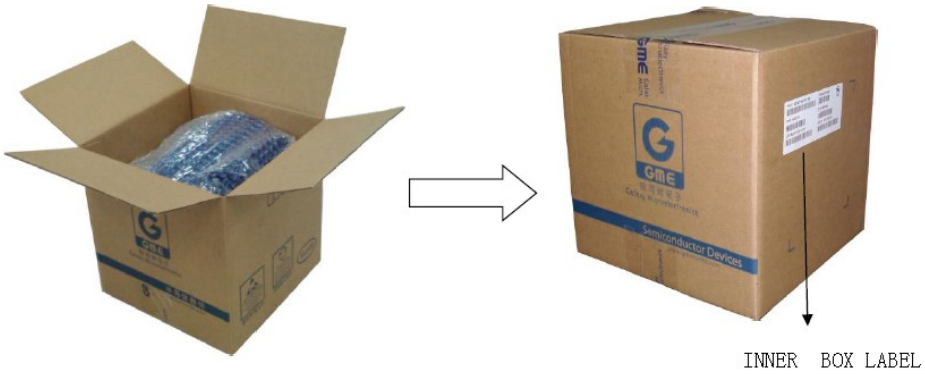

3. CARTON

Put in carton(4 inner box)　　CARTON LABEL(40KPCS)